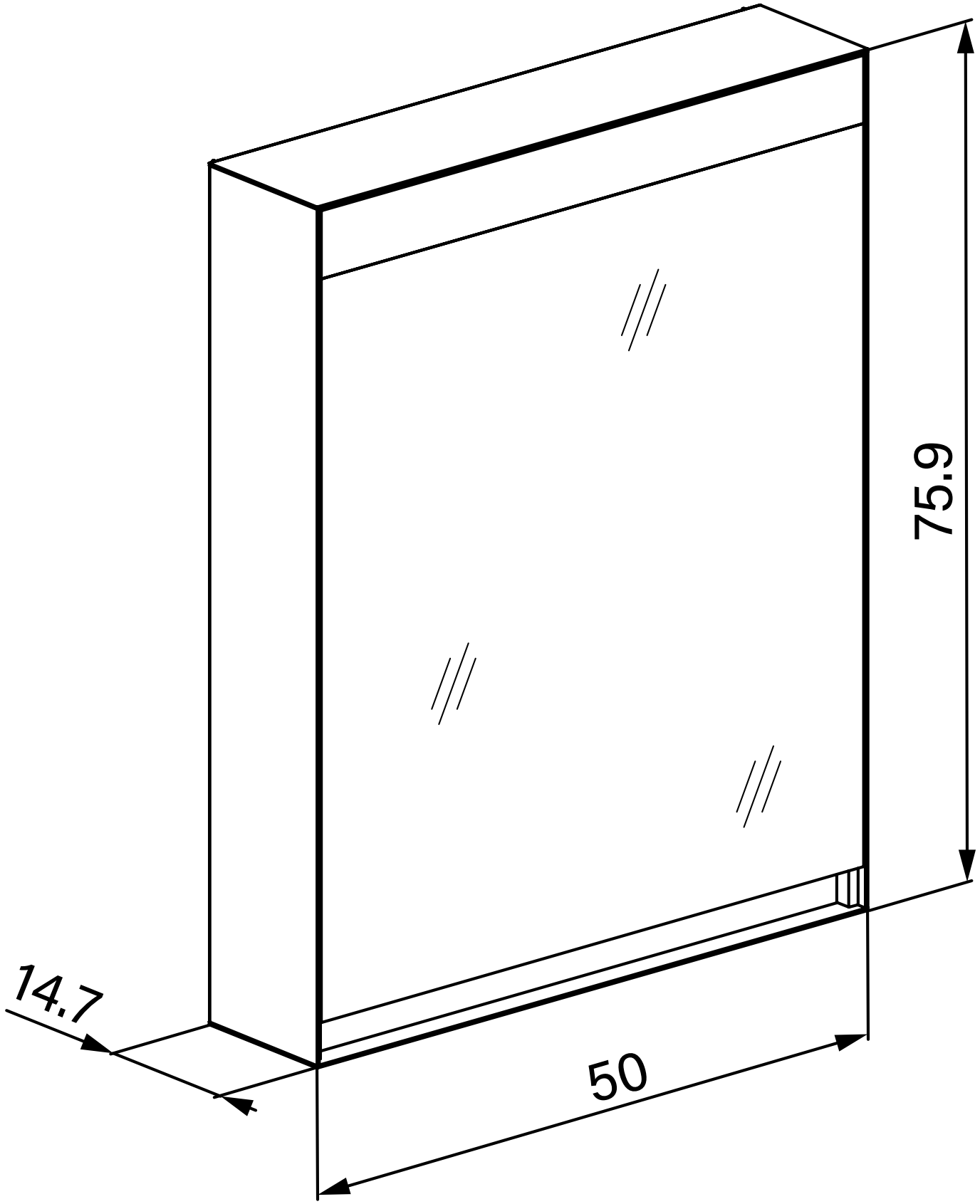
75.9
14.7
50