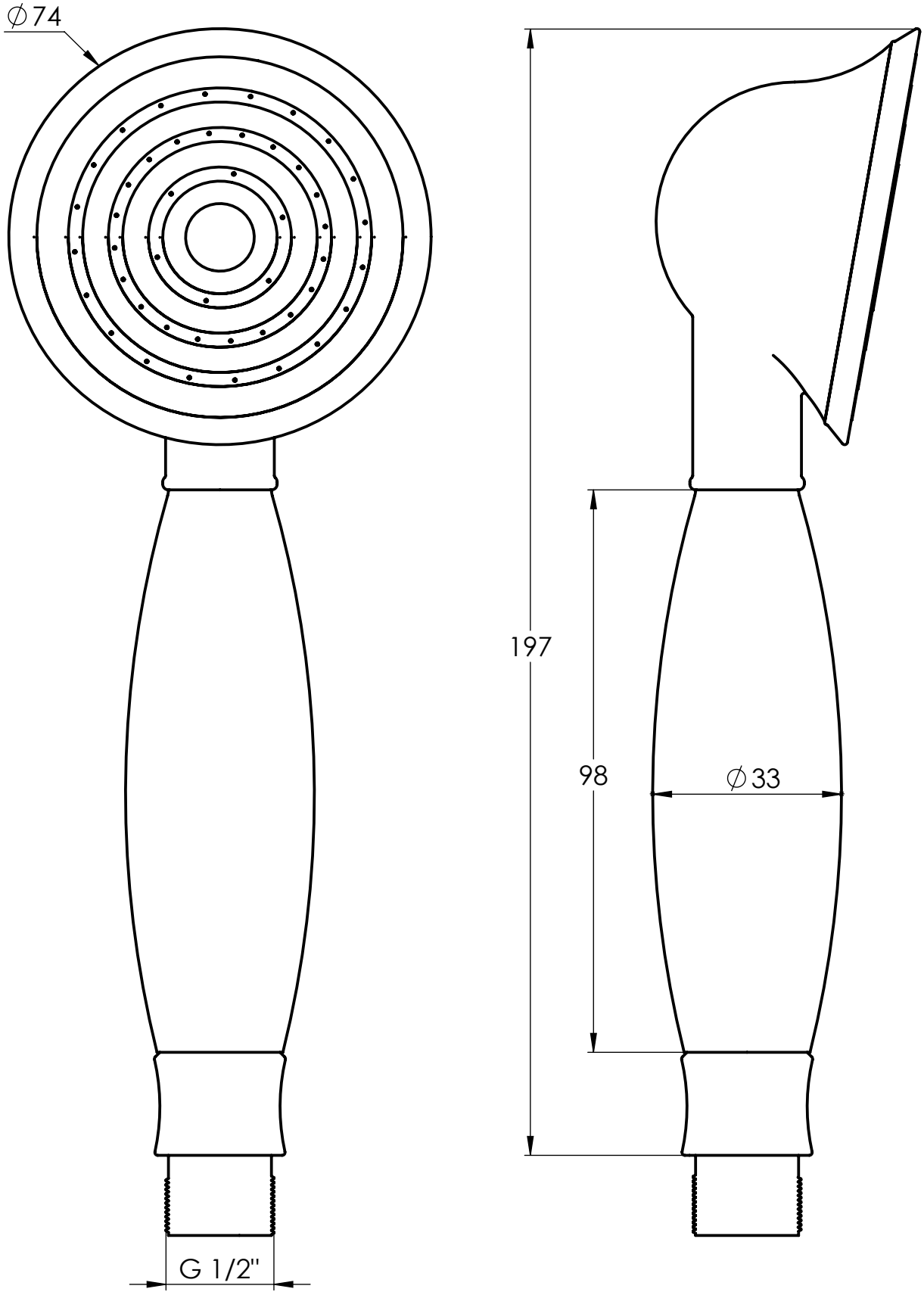
∅74
197
98
∅33
G 1/2"