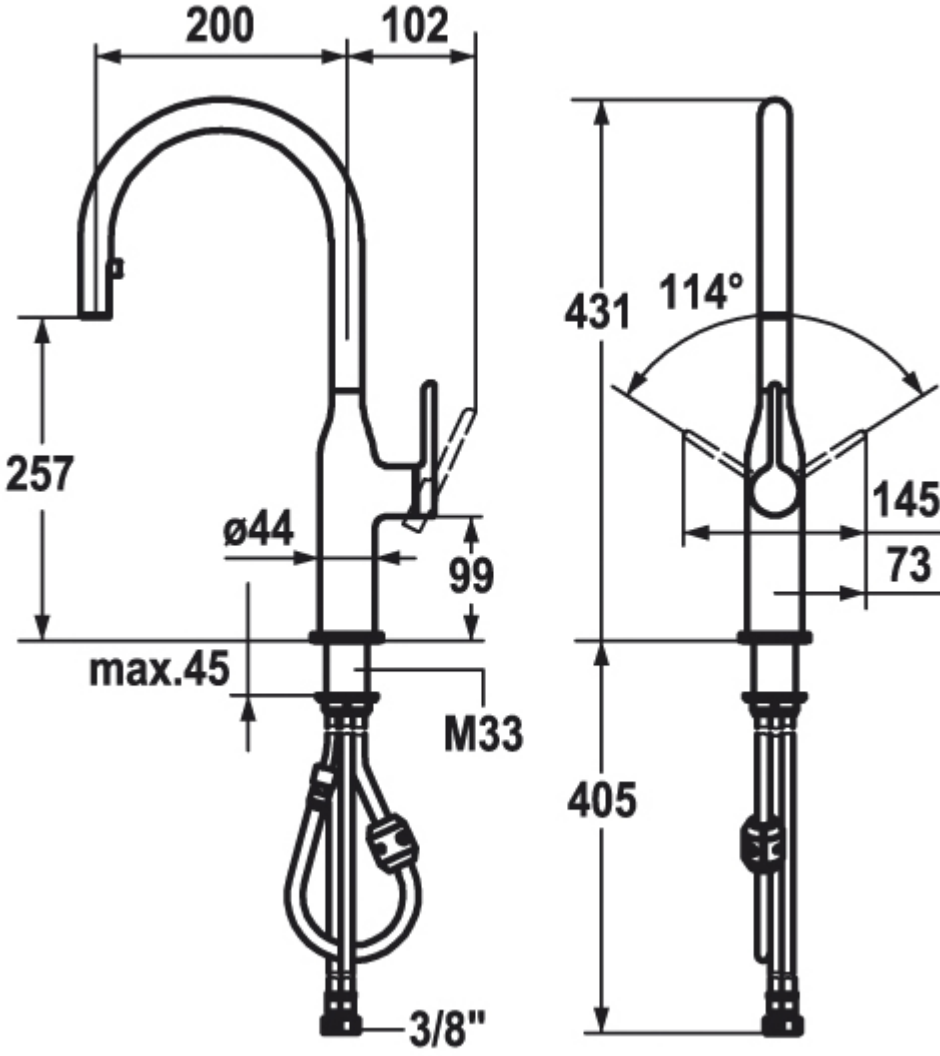
200
102
257
ø44
99
max.45
M33
3/8"
431
114°
145
73
405