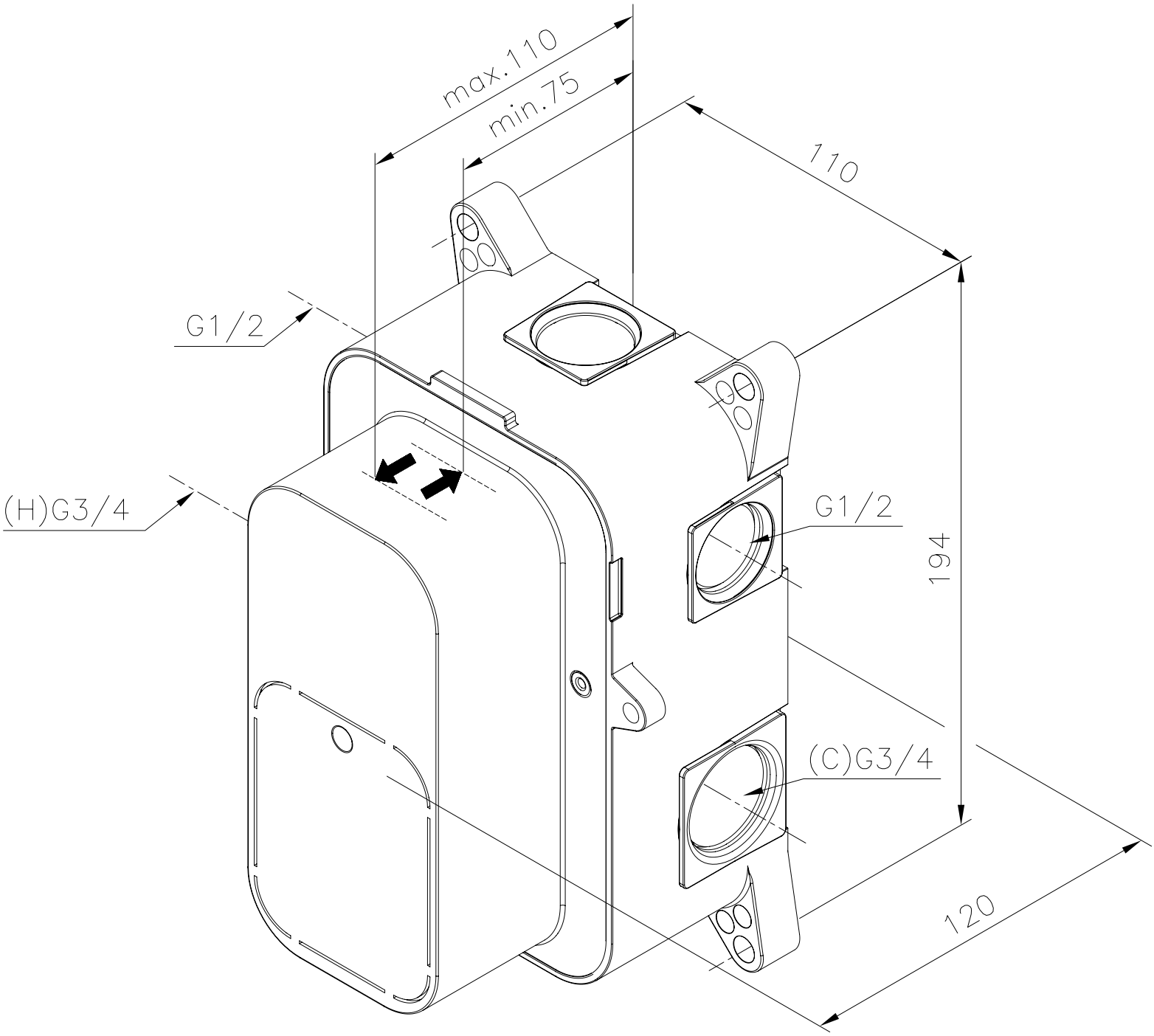
max.110
min.75
110
G1/2
(H)G3/4
G1/2
194
(C)G3/4
120