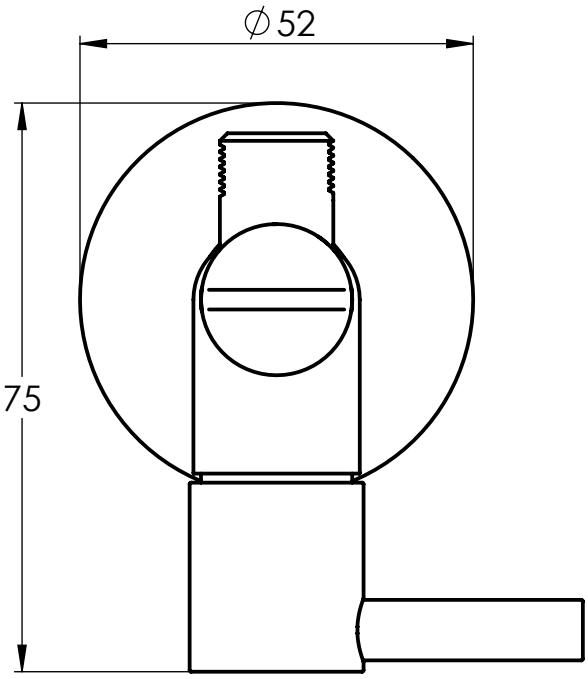
∅52
75

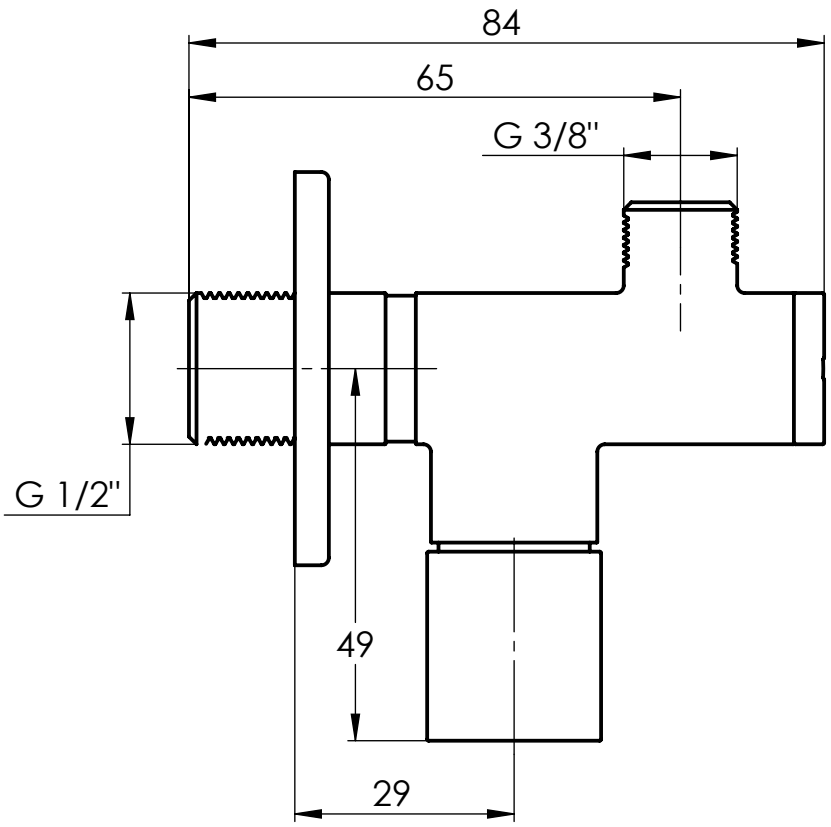
84
65
G 3/8"
G 1/2"
49
29