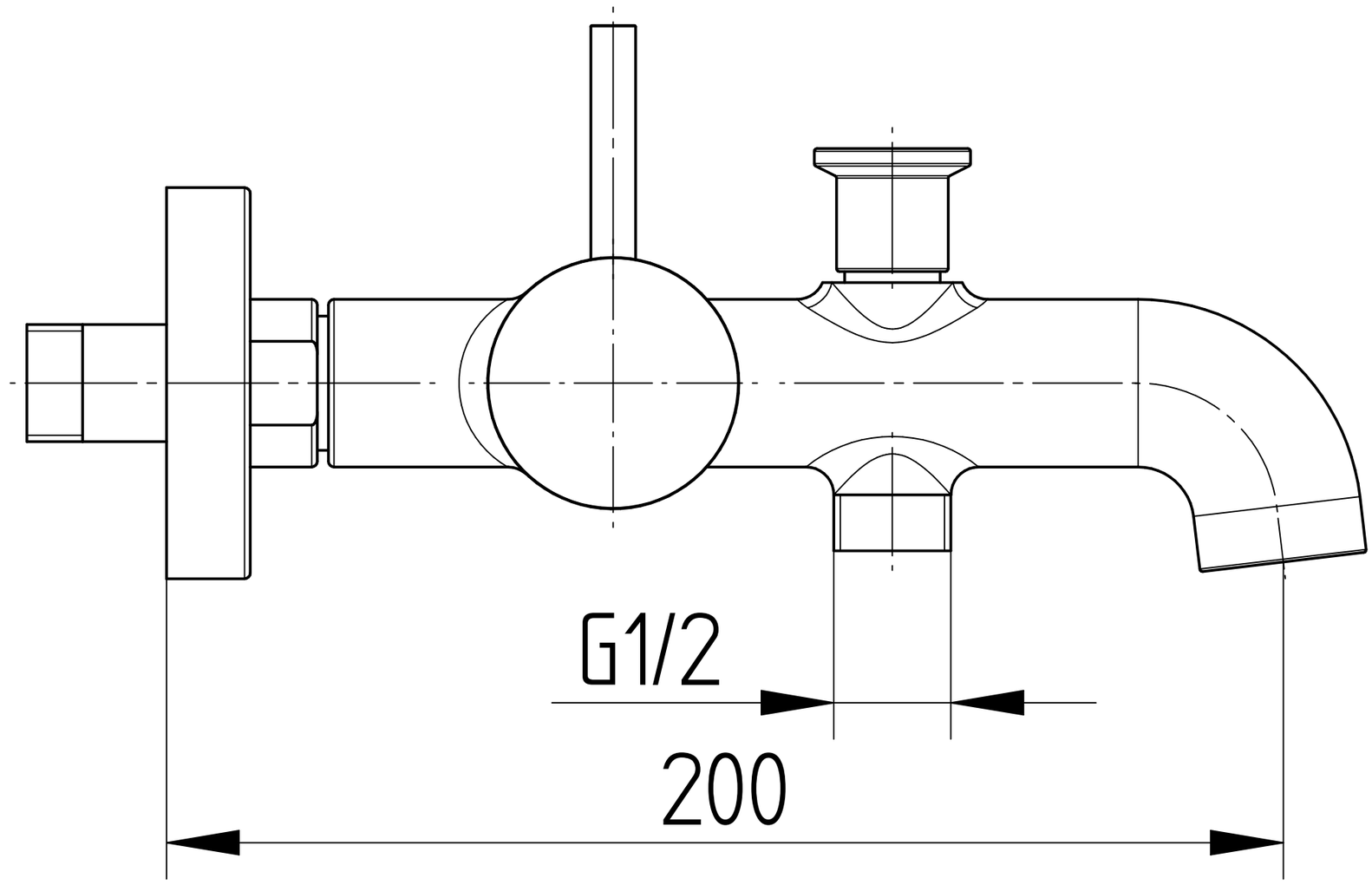
G1/2
200

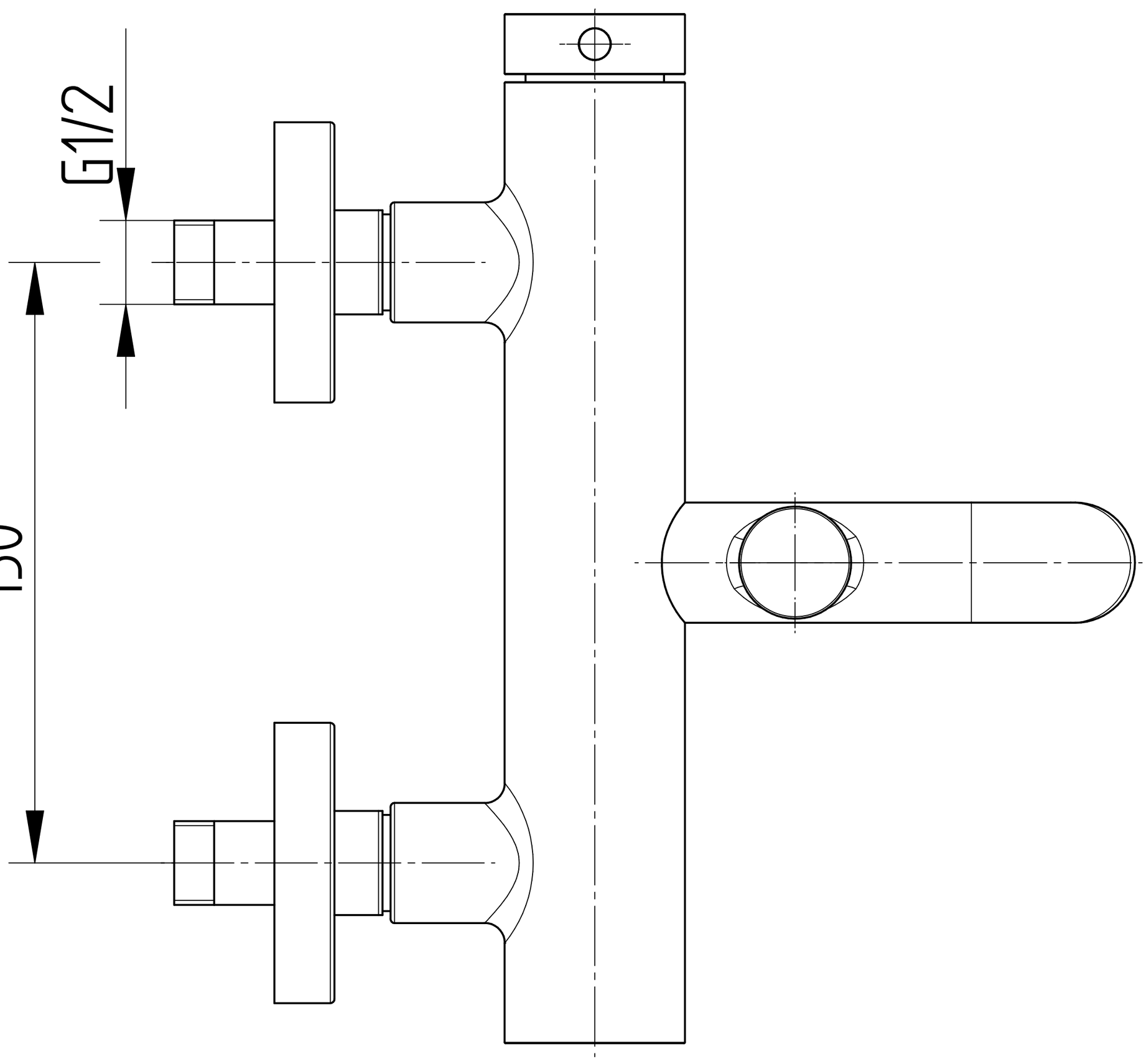
G1/2
150