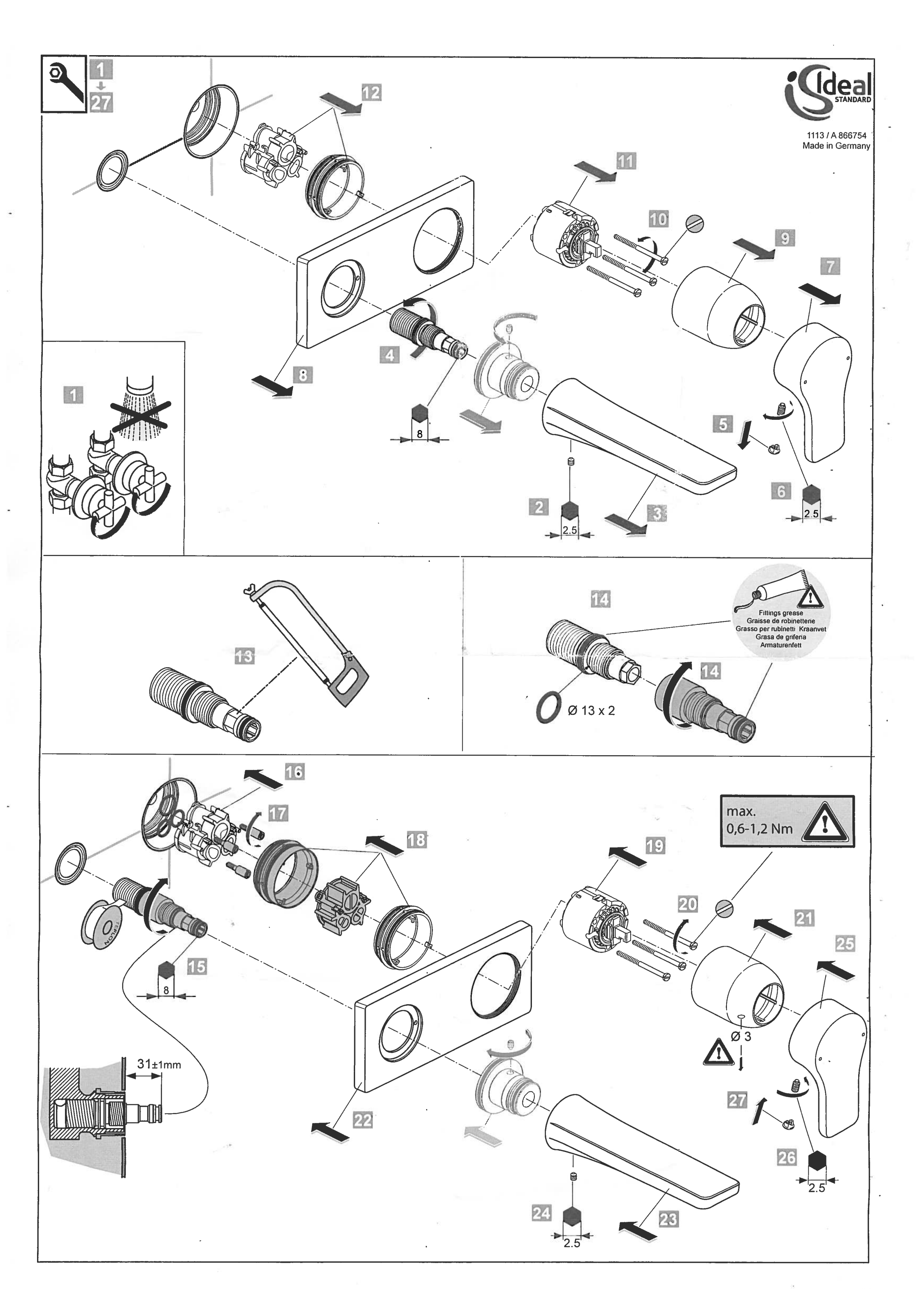
1
27
Ideal STANDARD
1113 / A 866754
Made in Germany
12
11
10
9
7
4
8
5
6
2
3
2.5
2.5
13
14
Fittings grease
Graisse de robinettene
Grasso per rubinetti Kraanvet
Grasa de grifena
Armaturenfett
14
Ø 13 x 2
16
17
18
19
max.
0,6-1,2 Nm
20
21
25
15
8
TEFLON
31±1mm
Ø 3
27
22
26
2.5
24
23
2.5