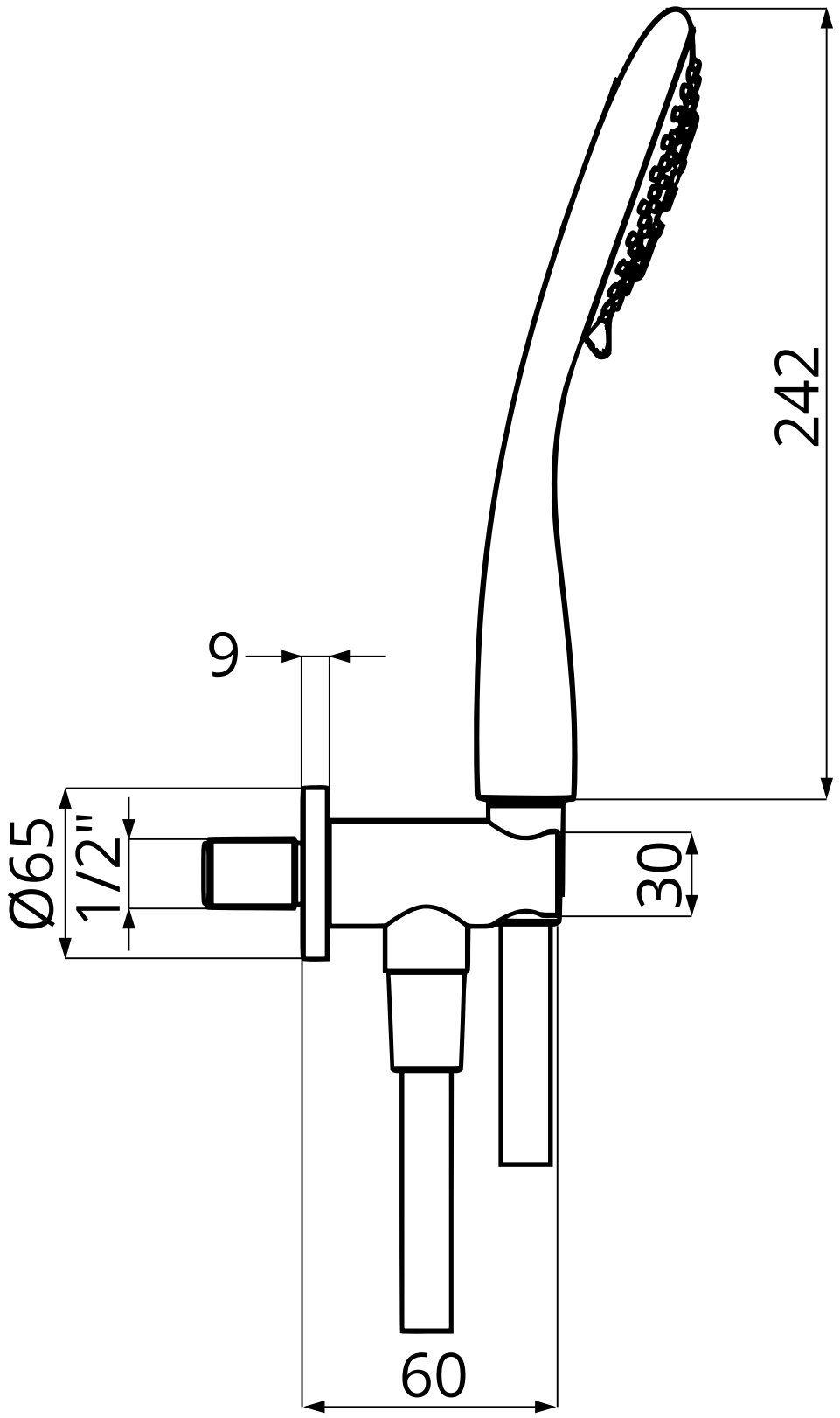

11.620225.4.01

herzbach