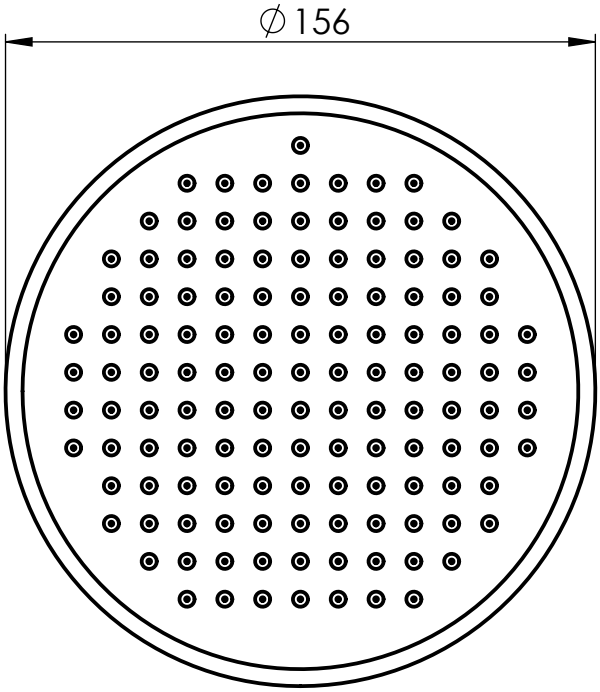
∅156

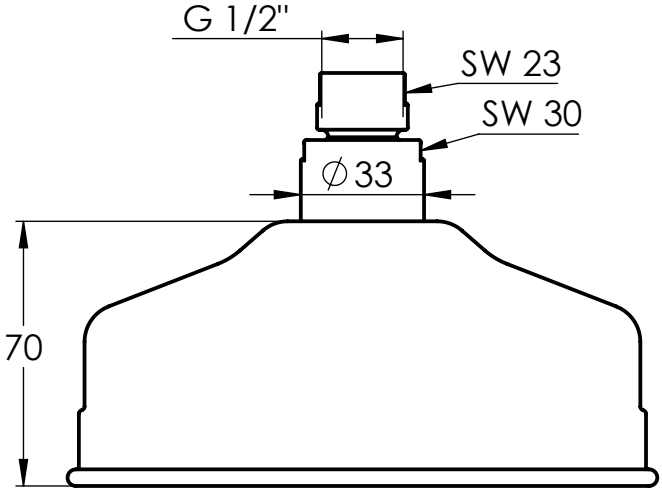
G 1/2"
SW 23
SW 30
∅33
70