herzbach

30.661600.2.03
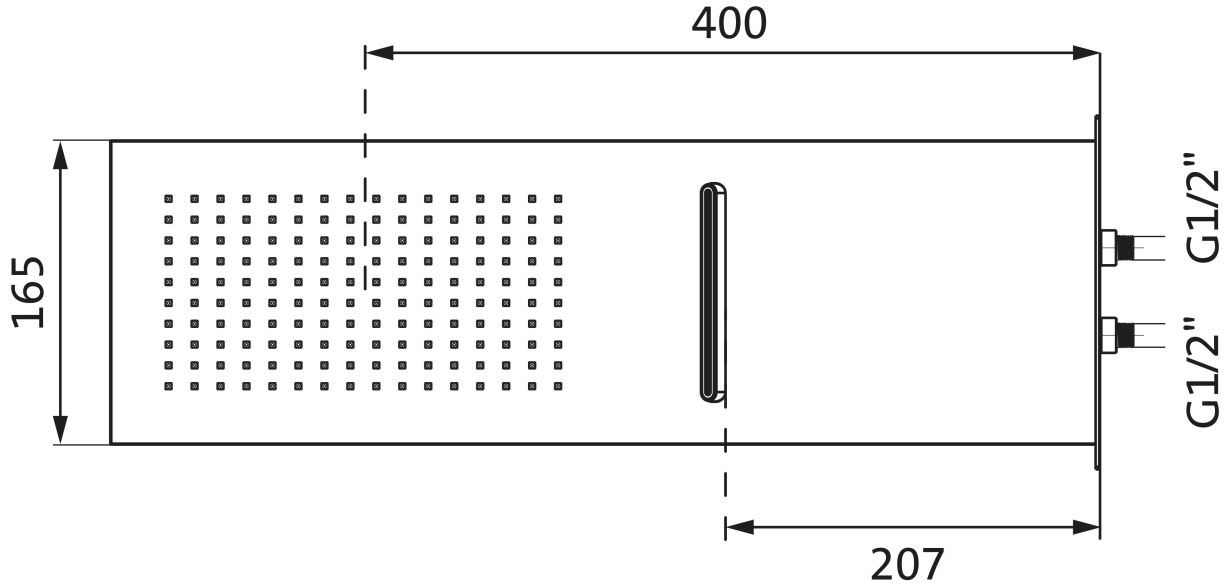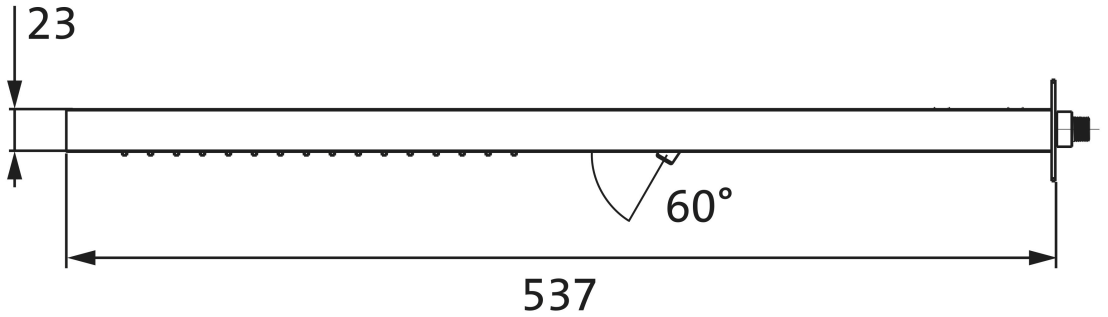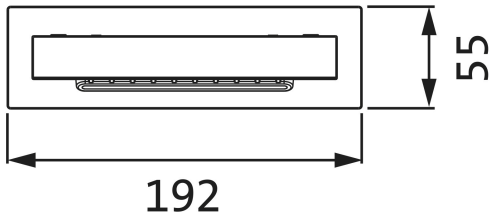
LIVING SPA Wand-Regenbrause 537x165mm Regen/Schwall PVD Gold