herzbach

11.600400.1.01
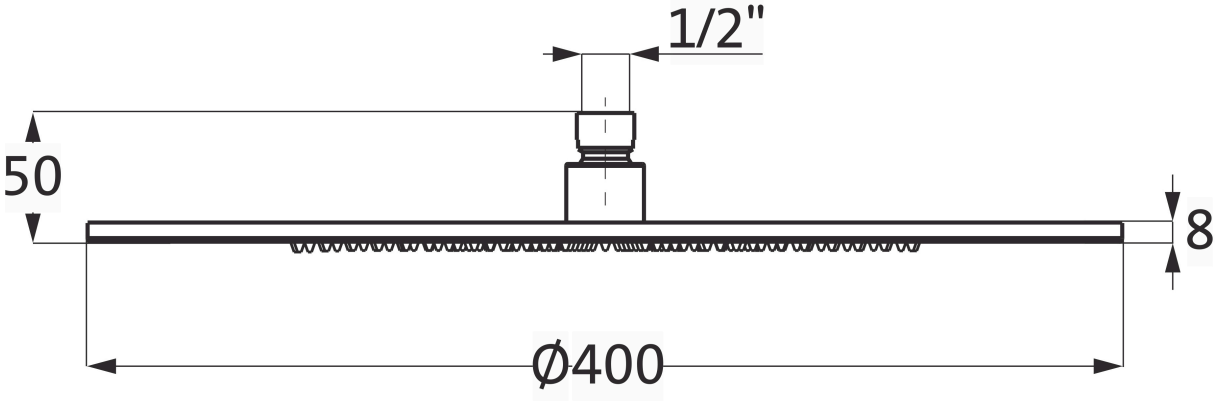
LIVING SPA Slim-Regenbrause Ø400mm Chrom