herzbach

11.691160.2.01
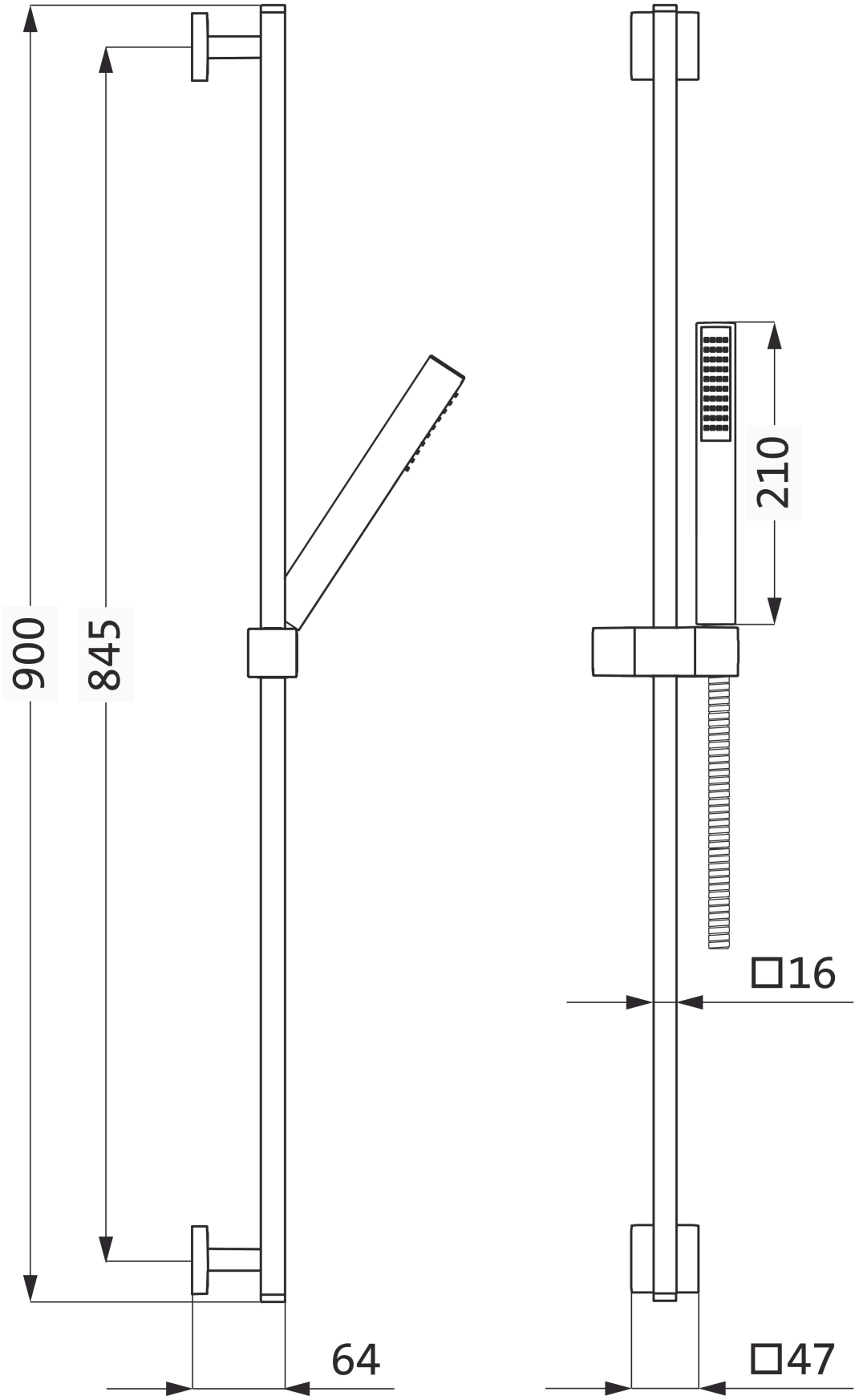
LIVING SPA Wandstangenset eckig 900mm Stabhandbrause ABS Chrom