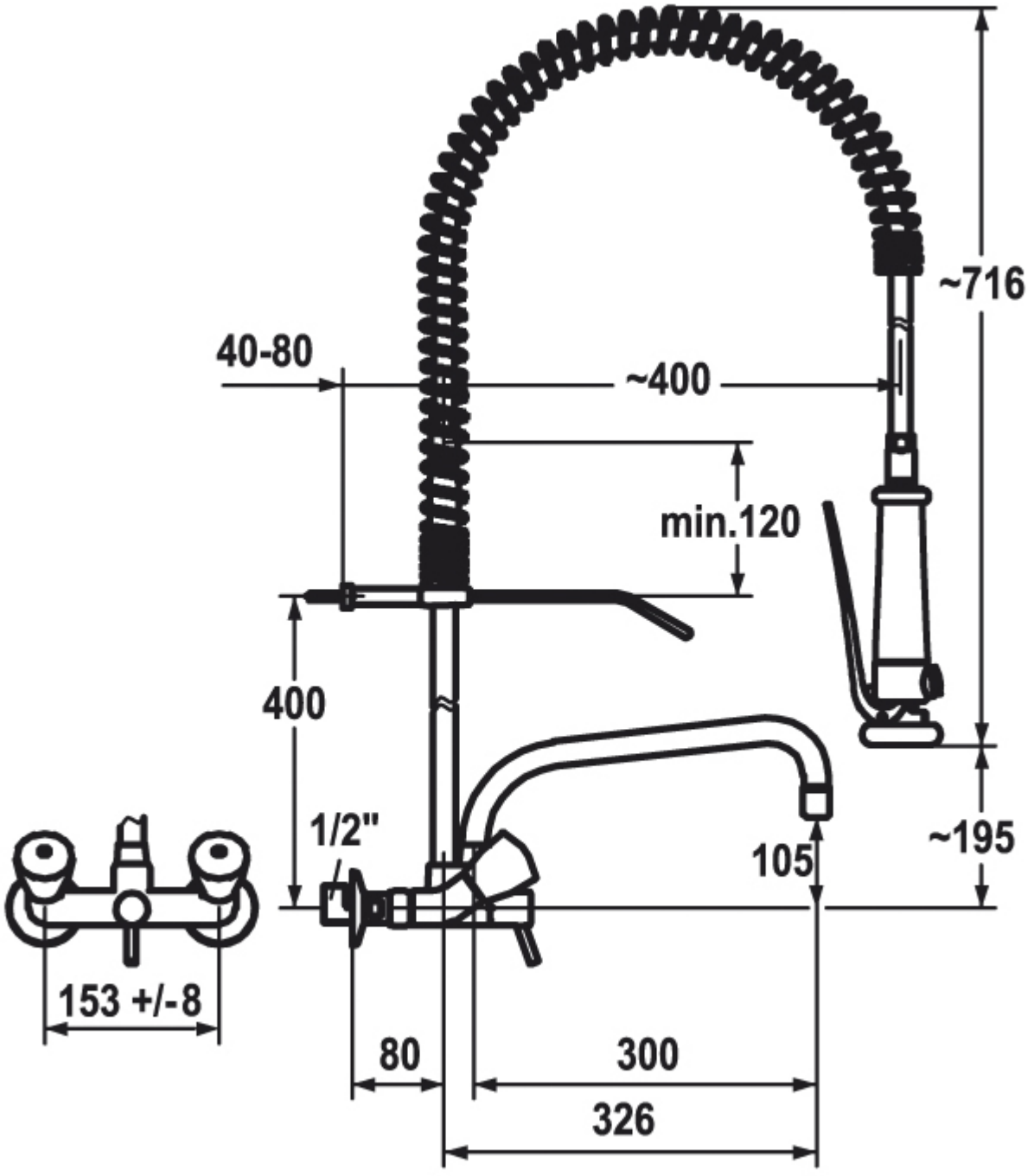
~716
40-80
~400
min.120
400
1/2"
105
~195
153 +/-8
80
300
326