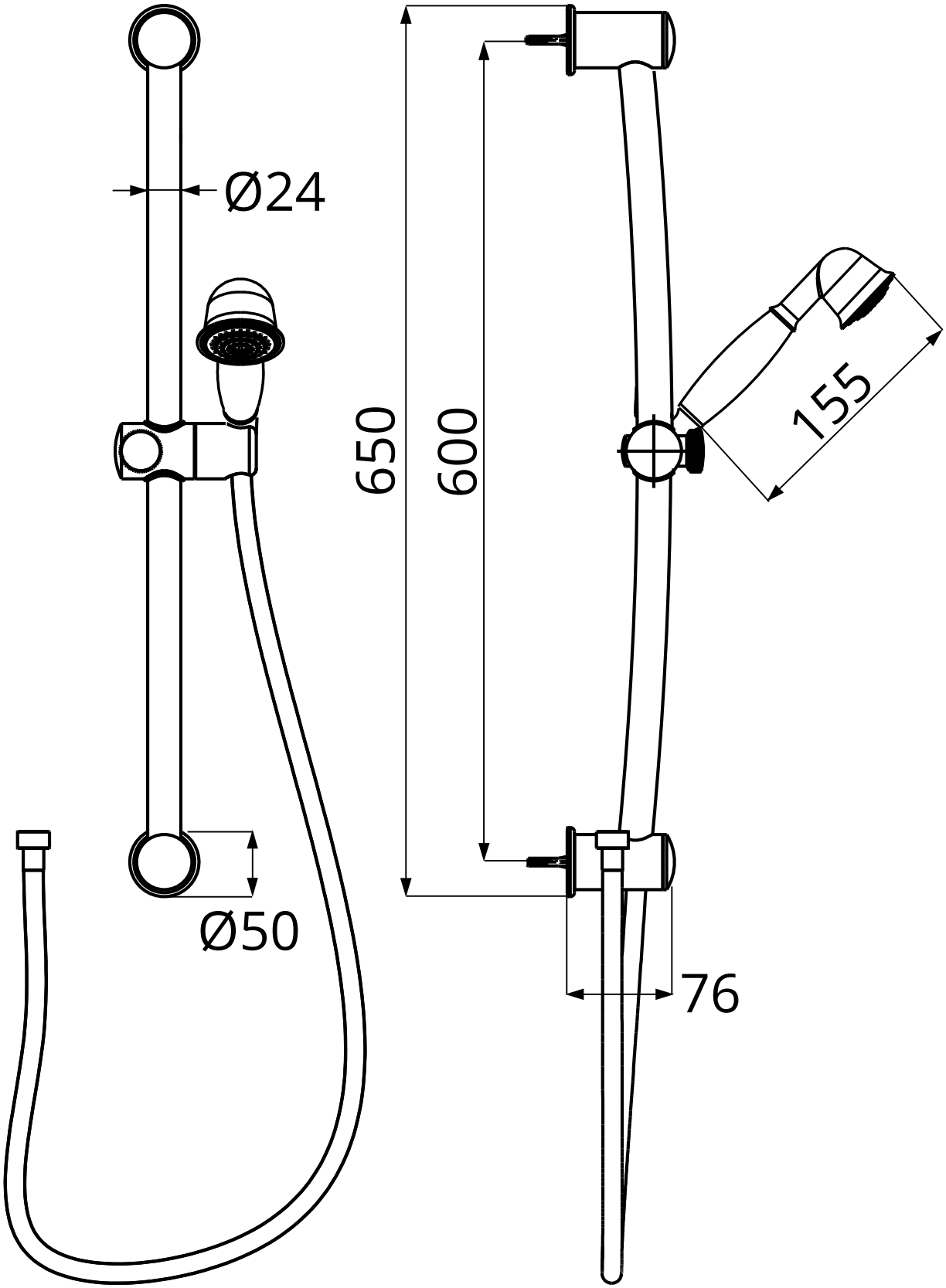

11.021800.1...

herzbach