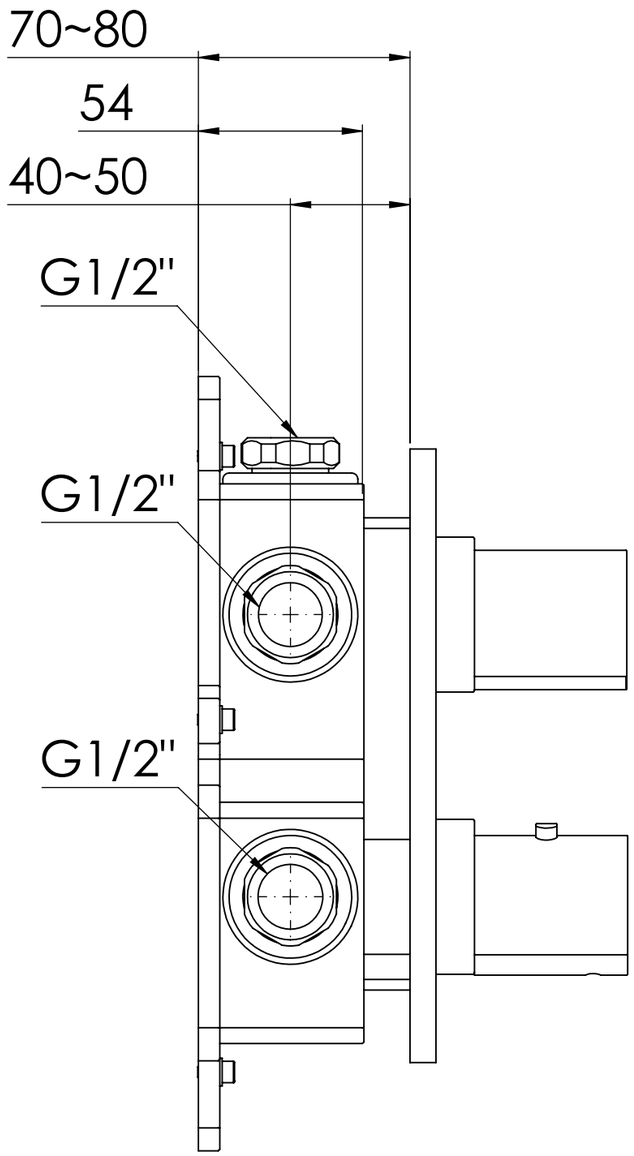

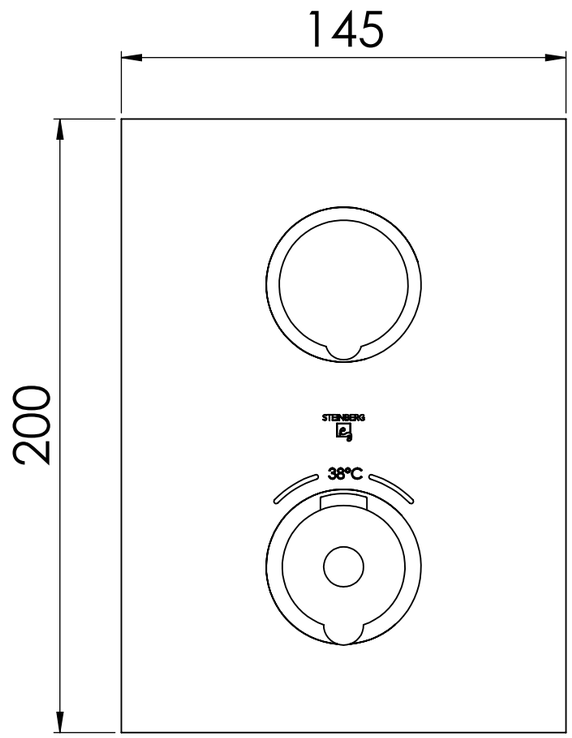

120 4123 1

STEINBERG