# herzbach

## 30.600250.1.03
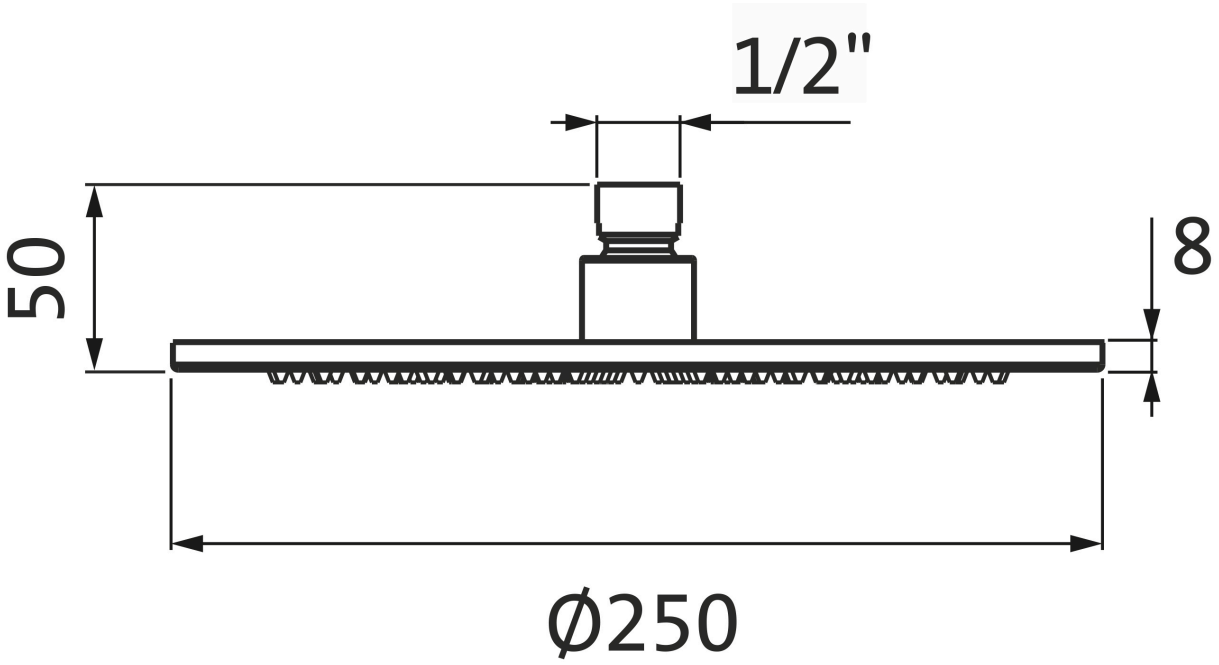
**LIVING SPA Slim-Regenbrause Ø250mm PVD Gold**