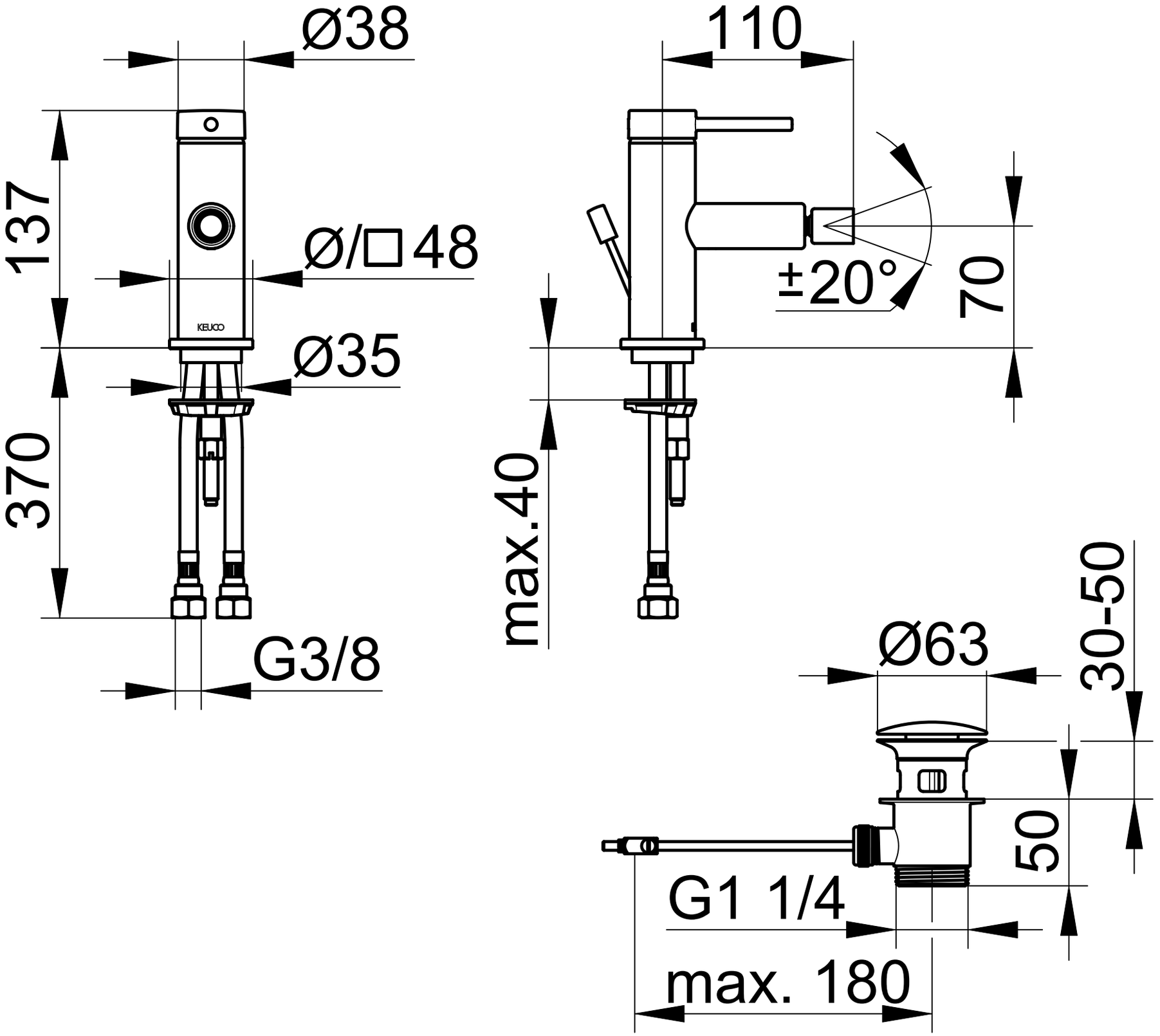
Ø38
110
137
Ø/□48
KEUCO
Ø35
370
G3/8
±20°
70
max.40
Ø63
30-50
50
G1 1/4
max. 180