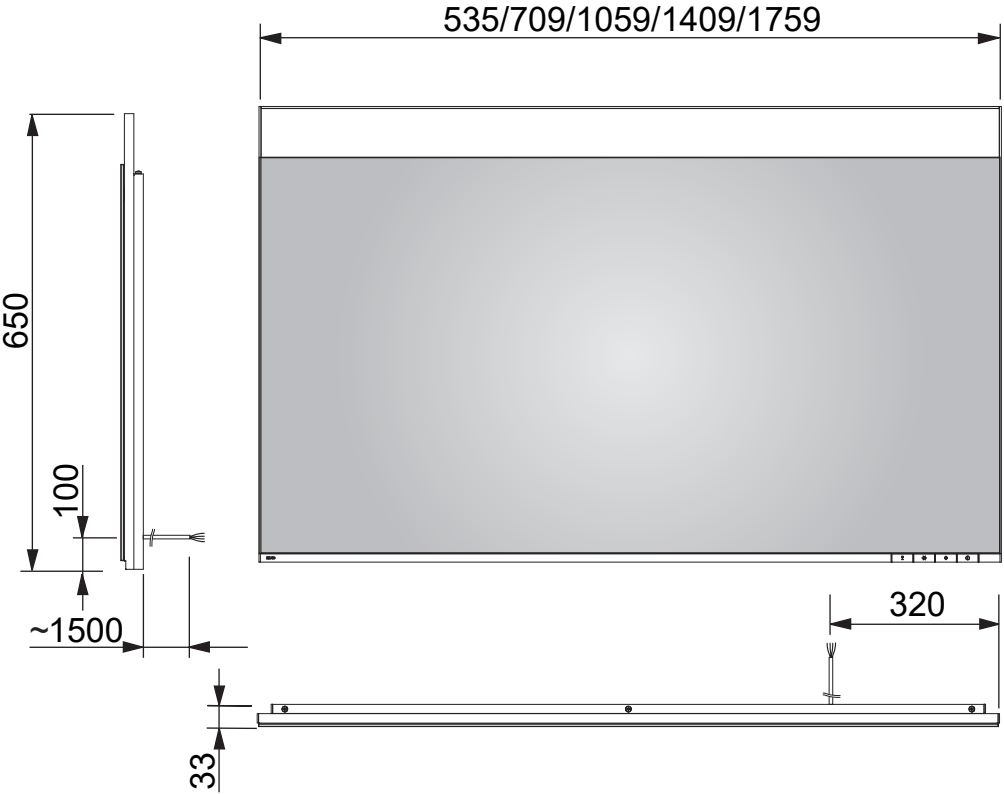
535/709/1059/1409/1759
650
100
~1500
320
33