herzbach

21.964820.2.39 | 40 | 41

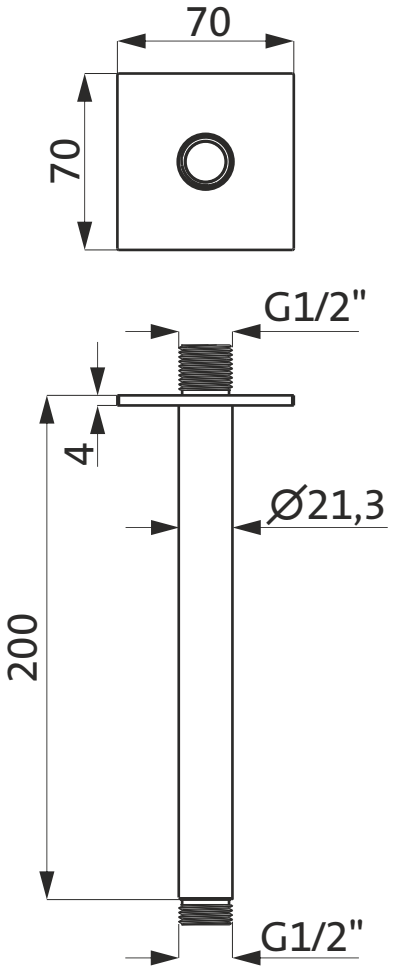

1:3