Theoretic Mass(kg)		Revision	
Surface Area(dm2)		A4	

Thread	Hole	Shaft

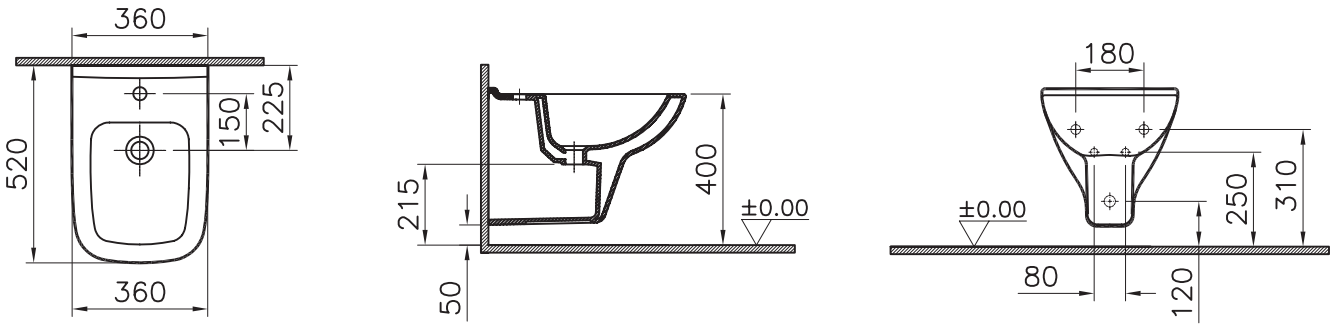

item	Quantity	Part Name	Drawing No	Material	Material Class
1	1	Wall-hung bidet	5508-0288/0290	Ceramic	

This drawing can only be used for the intended purposes. Unauthorized copying is strictly prohibited.

Series	Material	Material Class
S20	Ceramic	
	Wall-hung bidet	

Drawn By	Controlled By	Approved By	Date	Drawing No	Scale
G.GULTER	H.TURKOZ	S.VEDAT SARIGOL	16.12.2010	5508	1/20

VitrA® | ARTEMA®

R.S	Description	Date	NAME
01	Replaces Drawing date 16.12.2010	21.12.2012	Gokhan